Smart Temp™ Australia

DO = Damper Open
C = Common
DC = Damper Closed

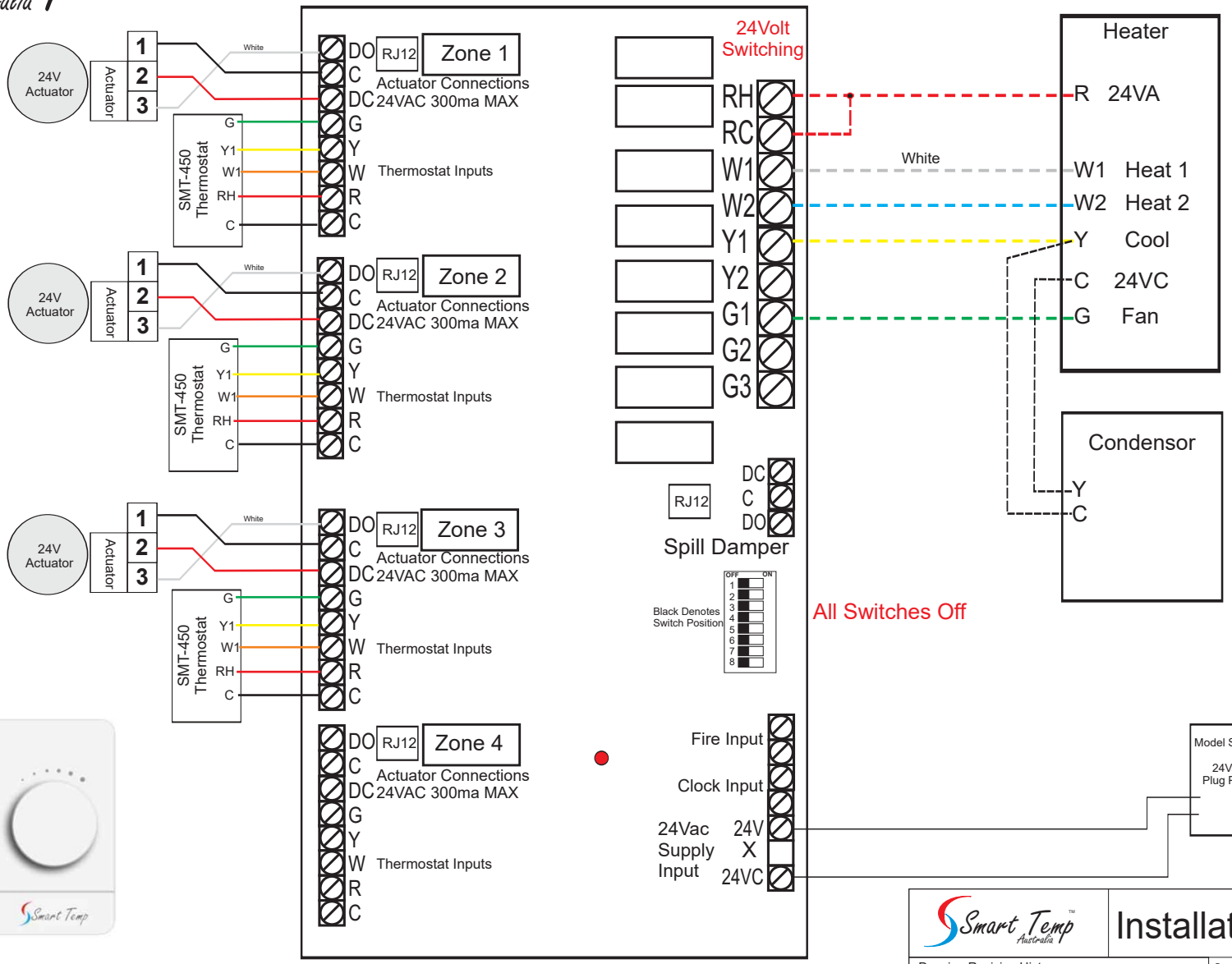

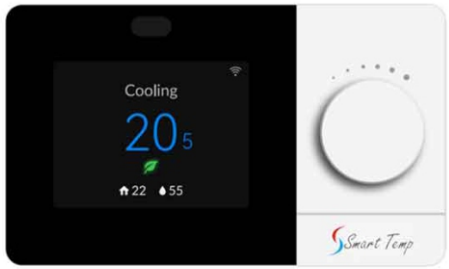

Under "System Type Selection" choose Conventional 1H1C

*Note 90 Sec Delays for dampers to move into position

Smart Temp™ Australia

Installation Drawing

Drawing Revision History		
Rev 1.5	By John K	2-10-2025

Drawing Name

SZ-4 Zone Module with SMT-450 Flexistat - Gas Heat / Ad on Cool

All care has been taken in the preparation of this drawing however Smart Temp Australia accept no responsibility for damage that may be caused by using this information. This is a guide only.

Unit 20, 1488 Ferntree Gully Rd Knoxfield Vic 3180
Ph:(03) 97630094 Www.thermostat.com.au