CELMEC ELECTRIC HEAT - 1 Stage /1 Phase

Switch Settings
1 = off
2 = off
3 = on
4 = off
5 = off
6 = n/a
7 = on
8 = off

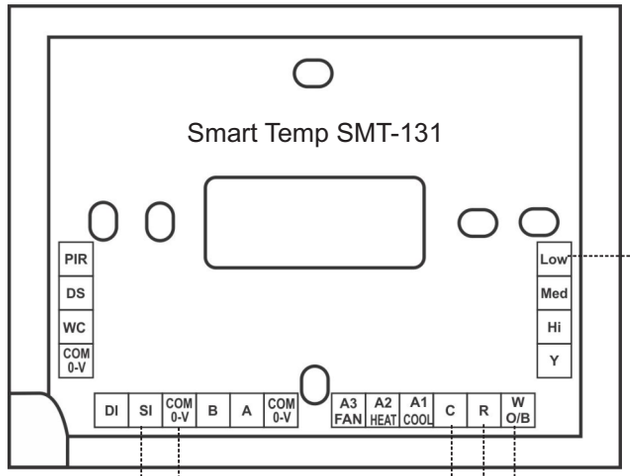

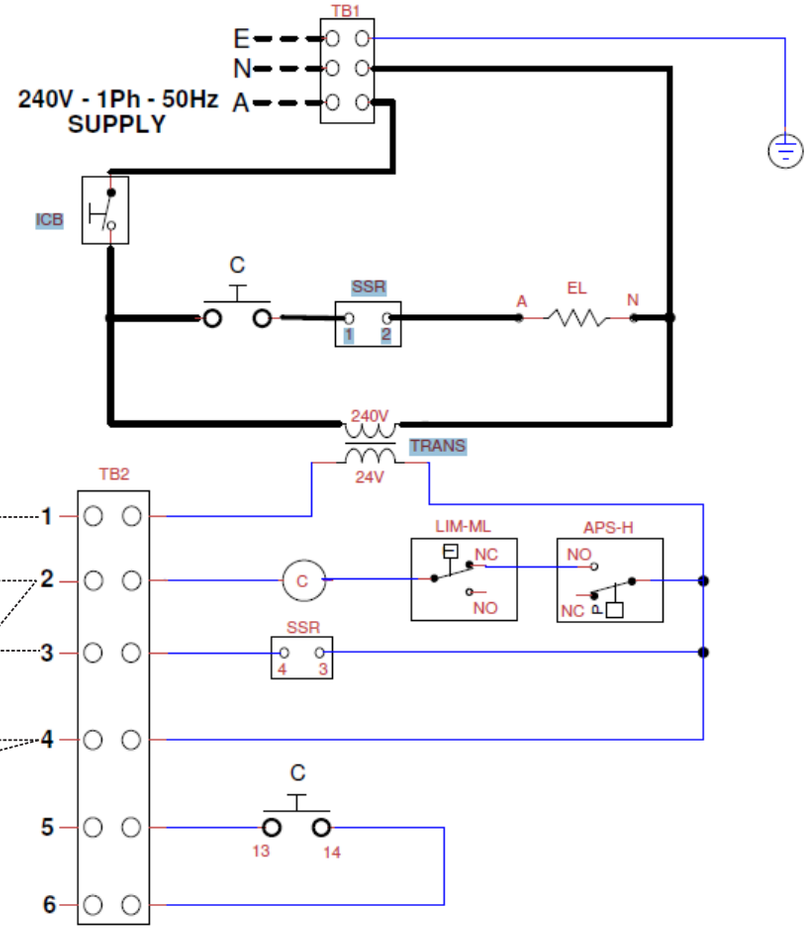

RS-1/02
Room Sensor

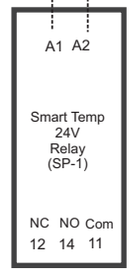

Fan Relay



Refer to Page 15 & 16 Installer Menu 8 (Fan purge)
Set to 2 = 3 Min fan purge

ALL CARE AND DILIGENCE HAS BEEN TAKEN IN THE PREPARATION OF THIS INTERFACE DIAGRAM. ***SMART TEMP AUSTRALIA PTY LTD*** WILL ONLY BE RESPONSIBLE FOR DAMAGE CAUSED TO THE SMART TEMP PRODUCT, AND ONLY IF IT HAD BEEN CORRECTLY APPLIED IN ACCORDANCE WITH THE MANUFACTURES INSTRUCTIONS.
IT IS THE DEALER / CONTRACTORS SOLE RESPONSIBLITY TO ENSURE CORRECT OPERATION OF THE MAJOR EQUIPMENT IS MAINTAINED.

Installation Drawing

Drawing Name: SMT-131 wired to a CELMEC Heater - Coolzone

19-05-26	REV 2.0	by John K

Unit 20, 1488 Ferntree Gully Road Knoxfield Vic 3180 Ph:(03) 9763 0094 www.thermostat.com.au